目 录 CONTENTS

筑路行业用链
Road Construction Industrial Chain

斗式提升机链
Bucket Elevator Chain..... 1-7

刮板输送机链
Scraper Conveyor Chain.. 8-11

埋刮板输送机链
Embedded Scraper Conveyor Chain..... 12-18

建筑行业用链
Building Industrial Chain

地面修整机链
Ground Finisher Chain..... 19

挖沟机链
Trencher Chains..... 20-23

沼泽地装备用链
Marsh Buggy Chain

沼泽地装备驱动链
Marsh Buggy Track Chain..... 24-25

斗式提升机链
Bucket Elevator Chain

A型
A Type

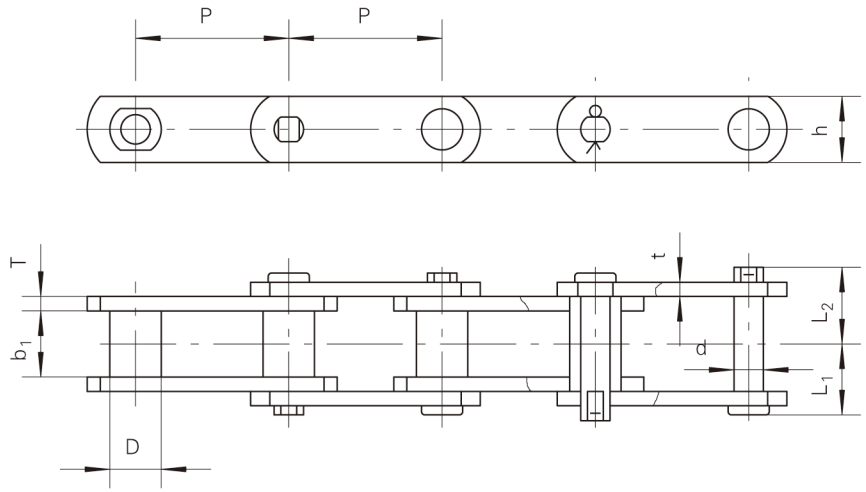

B型
B Type

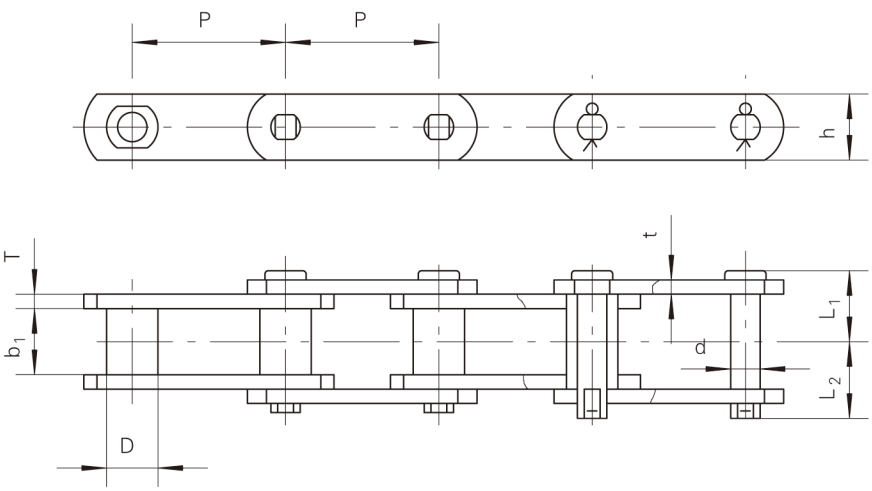

链号	节距	内节内宽	套筒外径	销轴				链板		最小抗拉强度	每米重量
Chain No.	Pitch	Width between inner sidebars	Bush Diameter	Pin				Sidebar		Ultimate Tensile Strength	Weight per Meter
	P	b_1(min)	D(max)	d	L_1	L_2	类型	h	t/T	Fu(min)	q
	mm	mm	mm	mm	mm	mm	Type	mm	mm	kN	kg/m
SS188	66.27	26.8	22.23	12.7	30.6	34.2	A	28.6	6.4	111.1	5.7
6188MS	66.27	26.8	22.23	12.7	31.9	35.4	B	28.6	6.4	115	6.38
SS131	78.1	32.4	31.75	15.88	41.8	44.9	A	38.1	9.5	177.8	11.62
HSB	80	35	23	16	38.9	44.6	B	40	8	240	9.34
SS102B	101.6	53.7	25.4	15.88	52.5	58.1	A	38.1	9.5	177.9	10.37
C6102S	101.6	56.36	25.4	15.88	52.8	61.2	A	38.1	9.5	231	11.17
S111	120.9	63.2	36.6	19.05	57.9	63.6	B	52.3	9.7	214	16.4
SS110	152.4	53.85	31.75	15.88	52.5	58	A	38.1	9.5	177.8	9.54

斗式提升机链
Bucket Elevator Chain

K1附件
K1 Attachment

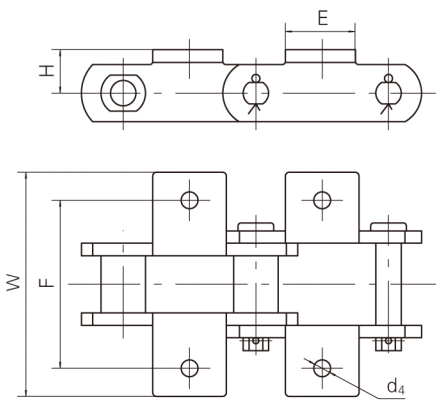

附件号	链号	F	W	E	H	d_4
Att. No.	Chain No.	mm	mm	mm	mm	mm
K1	SS131	104.6	157.0	73.9	31.2	13.0
	SS188	95.2	131.6	54.6	22	10.5

K2附件
K2 Attachment

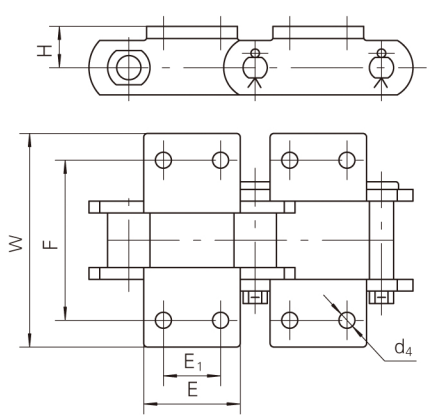

附件号	链号	F	W	H	E	E_1	d_4
Att. No.	Chain No.	mm	mm	mm	mm	mm	mm
K2	SS188	106.4	131.6	20.6	54.6	31.8	8
	SS131	104.6	157.0	25.4	73.9	38.1	13.1
	SS102B	134.9	162.8	25.4	66.5	44.45	10.4
	S111	158.8	210.8	38.1	92.7	58.7	13.0
	SS110	134.8	170	25.4	75	44.45	10.4
	6188MS	106.4	129.4	23	54	31.75	10.3

K3附件
K3 Attachment

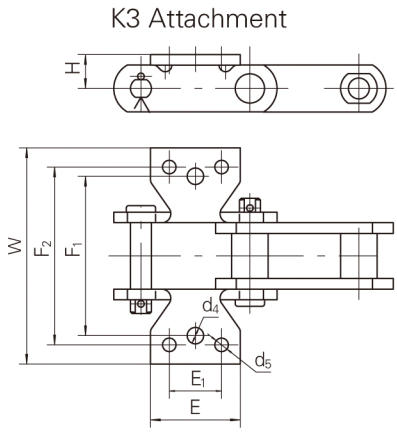

附件号	链号	F_1	F_2	W	H	E_1	E	d_4	d_5
Att. No.	Chain No.	mm	mm	mm	mm	mm	mm	mm	mm
K3	SS188	97	108.2	131.6	20.6	31.8	54.6	10.4	8.8
	C6102S	120.6	134.9	169	25.4	44.45	66.5	10.4	10.4

斗式提升机链
Bucket Elevator Chain

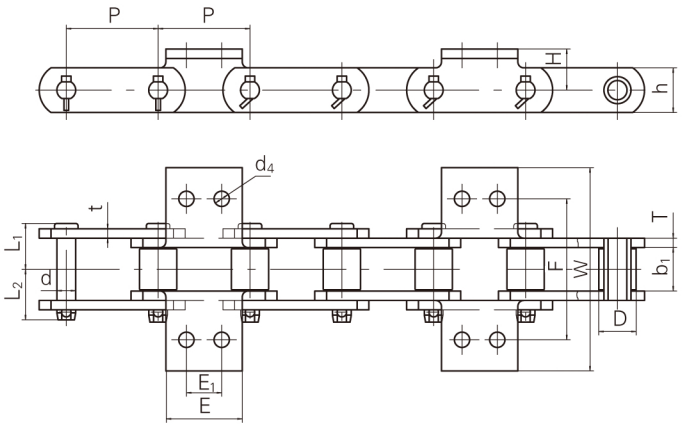

F	W	E_1	E	d_4	H
mm	mm	mm	mm	mm	mm
120	173	30	65	13	35

链号	节距	内节内宽	滚子外径	销轴			链板		最小抗拉强度
Chain No.	Pitch	Width between inner sidebars	Roller diameter	Pin			Sidebar		Ultimate tensile strength
	P	b_1(min)	D(max)	d	L_1	L_2	h	t/T	Fu(min)
	mm	mm	mm	mm	mm	mm	mm	mm	kN
9307S–K2	78.1	36	31.75	14.27	38.9	43.5	38.1	8	100

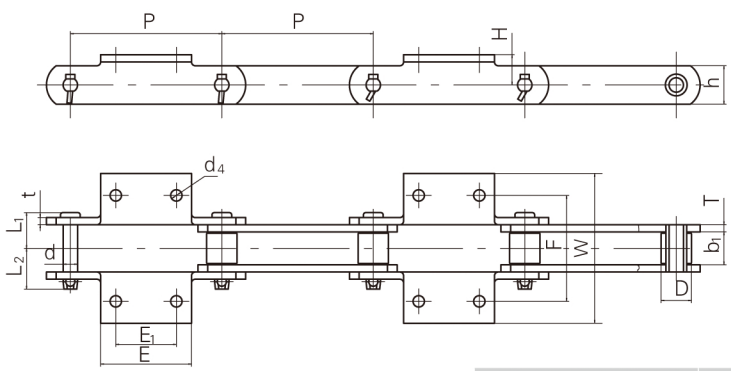

链号	F	W	E_1	E	d_4	H
Chain No.	mm	mm	mm	mm	mm	mm
20200S–K2	140	198	80	120	15	40
26200S–K2	160	213	80	120	15	55

链号	节距	内节内宽	滚子外径	销轴			链板		最小抗拉强度
Chain No.	Pitch	Width between inner sidebar	Roller diameter	Pin			Sidebar		Ultimate tensile strength
	P	b_1(min)	D(max)	d	L_1	L_2	h	t/T	Fu(min)
	mm	mm	mm	mm	mm	mm	mm	mm	kN
20200S–K2	200	43.8	40.1	19.05	47.8	54.8	50.8	9.5	300
26200S–K2	200	57	44.5	22.23	54.4	61.4	63.5	9.5	450

斗式提升机链
Bucket Elevator Chain

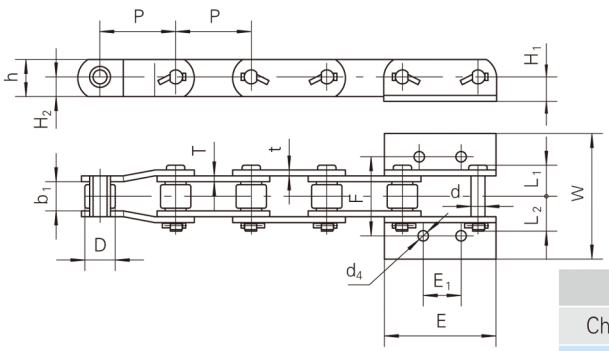

链号	F	W	d_4	E_1	E	H_1	H_2
Chain No.	mm	mm	mm	mm	mm	mm	mm
FCM-11337	104.8	136.5	13.5	38.1	115.9	28.6	20.65
P78.1-K2	104.8	145.24	14.27	38.1	115.9	28.6	22.25
RC16089	108	171.5	14.3	57.15	152.4	33.34	26.99
23310-61	108	146	14.3	57.15	163.5	33.34	23.8
23312-73	136.5	175.4	17.5	73	166.5	38.1	28.6

链号	节距	内节内宽	滚子外径	销轴			链板		最小抗拉强度
Chain No.	Pitch	Width between inner sidebars	Roller diameter	Pin			Sidebar		Ultimate tensile strength
	P	b_1(min)	D(max)	d	L_1	L_2	h	t/T	Fu(min)
	mm	mm	mm	mm	mm	mm	mm	mm	kN
FCM11337	78.1	37.9	31.75	15.76	41.9	46.2	41.3	8	213.6
P78.1-K2	78.1	38.1	34.93	15.88	41.9	47	44.5	8	275.6
RC16089	103.2	37.9	41.43	19.05	42.2	47.8	50.8	8	205
23310-61	103.2	38.6	41.28	19.05	42.5	47.8	47.6	8	240
23312-73	103.2	40.98	44.45	22.23	47.5	54.2	57.2	9.5	382.3

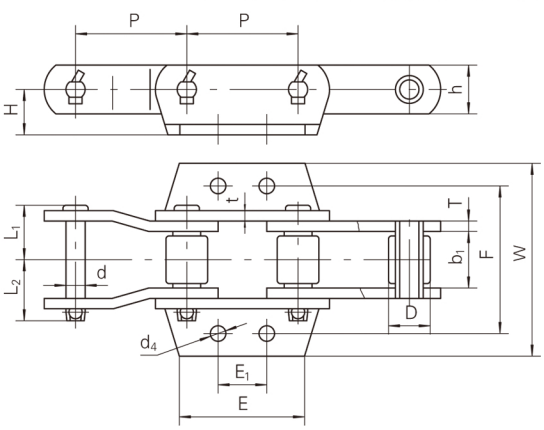

F	W	d_4	E_1	E	H
mm	mm	mm	mm	mm	mm
134.9	176.3	14.2	44.45	114.3	41.4

链号	节距	内节内宽	滚子外径	销轴			链板		最小抗拉强度
Chain No.	Pitch	Width between inner sidebars	Roller diameter	Pin			Sidebar		Ultimate tensile strength
	P	b_1(min)	D(max)	d	L_1	L_2	h	t/T	Fu(min)
	mm	mm	mm	mm	mm	mm	mm	mm	kN
RC15491	101.6	50.4	38.1	19.05	50.9	57.1	44.5	9.5	290

斗式提升机链
Bucket Elevator Chain

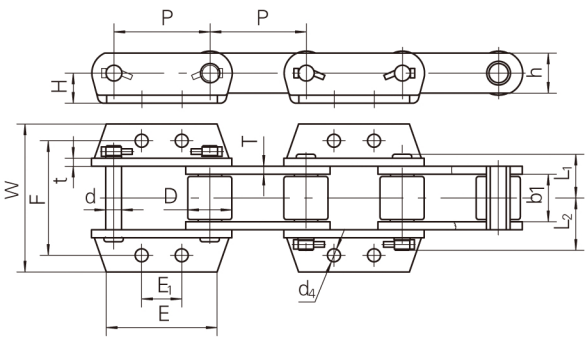

链号	F	W	E_1	E	d_4	H
Chain No.	mm	mm	mm	mm	mm	mm
B9856-K44	184.15	237.2	63.5	175.5	20.63	47.63
RC15128	184.2	244.5	63.5	178.5	20.6	47.65

链号	节距	内节内宽	滚子外径	销轴			链板		最小抗拉强度
Chain No.	Pitch	Width between inner sidebar	Roller diameter	Pin			Sidebar		Ultimate tensile strength
	P	b_1(min)	D(max)	d	L_1	L_2	h	t/T	Fu(min)
	mm	mm	mm	mm	mm	mm	mm	mm	kN
B9856-K44	152.4	74.93	69.85	25.3	72.2	82.7	63.5	12.7	500
RC15128	152.4	76.2	69.85	25.4	71.3	77.7	63.5	12.7	622.3

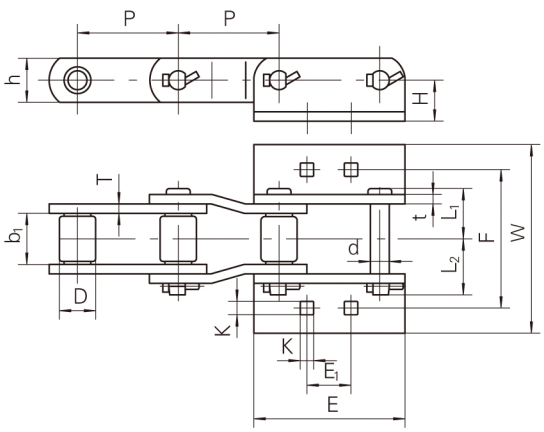

链号	F	W	K	E_1	E	H
Chain No.	mm	mm	mm	mm	mm	mm
RC15619	139.7	190.5	13.5	44.45	152.4	41.3
C3952-K2	139.7	177.8	13.5	44.45	152.4	41.3

链号	节距	内节内宽	滚子外径	销轴			链板		最小抗拉强度
Chain No.	Pitch	Width between inner sidebars	Roller diameter	Pin			Sidebar		Ultimate tensile strength
	P	b_1(min)	D(max)	d	L_1	L_2	h	t/T	Fu(min)
	mm	mm	mm	mm	mm	mm	mm	mm	kN
RC15619	101.6	50.4	36.53	19.05	50.9	57.1	44.5	9.5	280
C3952-K2	101.6	50.4	36.53	19.05	50.9	59.1	44.5	9.5	280

斗式提升机链
Bucket Elevator Chain

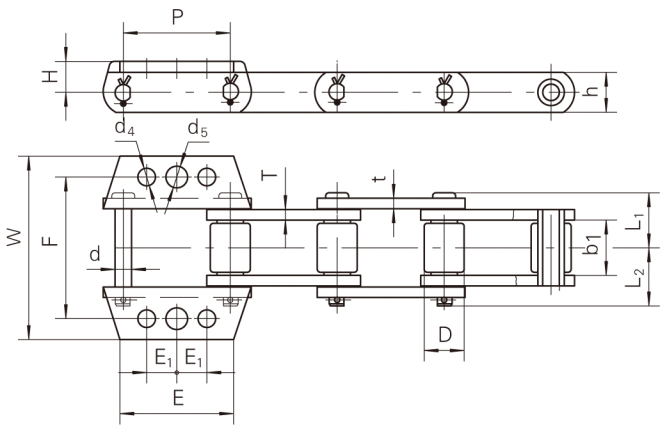

F	W	E_1	E	d_4	d_5	H
mm	mm	mm	mm	mm	mm	mm
134.9	174.6	28.6	108	16.66	20.63	28.6

链号	节距	内节内宽	滚子外径	销轴			链板		最小抗拉强度
Chain No.	Pitch	Width between inner sidebars	Roller diameter	Pin			Sidebar		Ultimate tensile strength
	P	b_1(min)	D(max)	d	L_1	L_2	h	t/T	Fu(min)
	mm	mm	mm	mm	mm	mm	mm	mm	kN
3433–K33	101.6	52.83	38.1	15.74	52.3	56.7	38.1	9.5	190

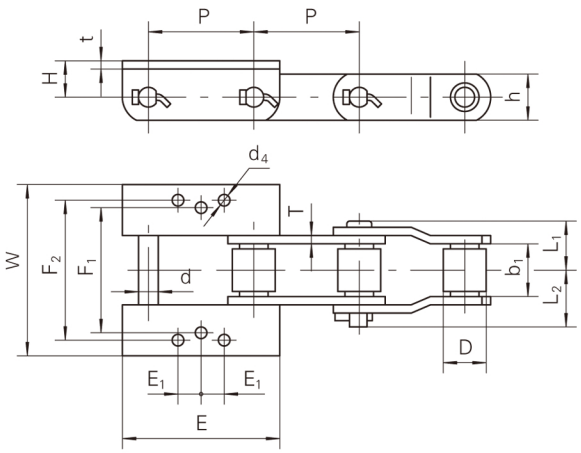

链号	F_1	F_2	W	E	E_1	d_4	H
Chain No.	mm	mm	mm	mm	mm	mm	mm
RC15127	119.1	134.9	165.1	152.4	22.25	11.9	38.1
4116SP	120.65	134.92	177.8	155.6	22.25	11.1	41.3

链号	节距	内节内宽	滚子外径	销轴			链板		最小抗拉强度
Chain No.	Pitch	Width between inner sidebars	Roller diameter	Pin			Sidebar		Ultimate tensile strength
	P	b_1(min)	D(max)	d	L_1	L_2	h	t/T	Fu(min)
	mm	mm	mm	mm	mm	mm	mm	mm	kN
RC15127	101.6	50.8	41.25	19.05	46.1	54.9	44.5	8	266.8
4116SP	104.55	50.4	41.28	19.05	50.9	59.1	44.5	9.5	267

斗式提升机链
Bucket Elevator Chain

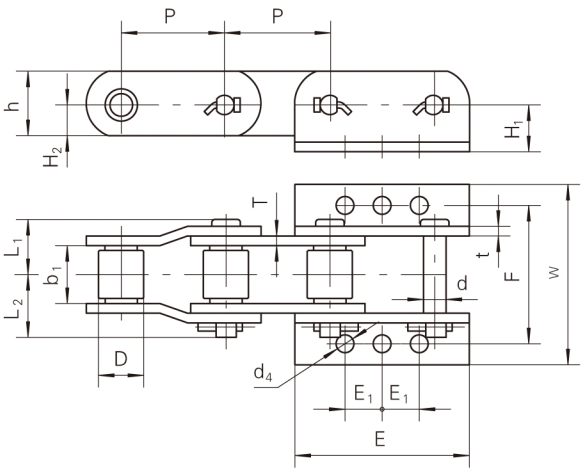

链号	F	W	d_4	E_1	E	H_1	H_2
Chain No.	mm	mm	mm	mm	mm	mm	mm
FCM-11336	134.9	180.3	17.5	36.5	170.6	47.6	31.75
RC16090	136.5	178.1	17.5	36.5	171.5	46.04	30.16

链号	节距	内节内宽	滚子外径	销轴			链板		最小抗拉强度
Chain No.	Pitch	Width between inner sidebars	Roller diameter	Pin			Sidebar		Ultimate tensile strength
	P	b_1(min)	D(max)	d	L_1	L_2	h	t/T	Fu(min)
	mm	mm	mm	mm	mm	mm	mm	mm	kN
FCM-11336	102.6	55.3	44.5	22.23	54.5	61.6	63.5	9.5	443.4
RC16090	103.2	55.6	44.45	22.23	54.6	62.1	63.5	9.5	400

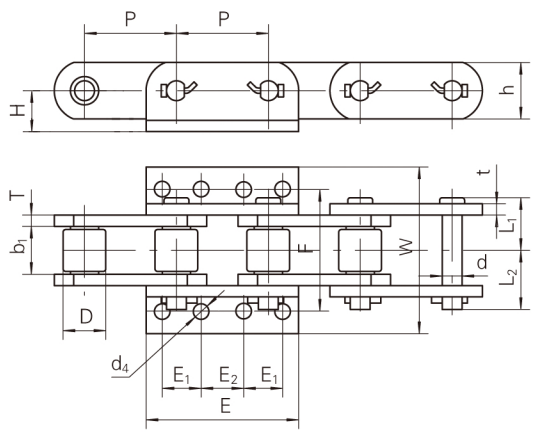

H	F	W	E	E_1	E_2	d_4
mm	mm	mm	mm	mm	mm	mm
46	136.7	187.5	178	43.7	47.8	17.5

链号	节距	内节内宽	滚子外径	销轴			链板		最小抗拉强度
Chain No.	Pitch	Width Between inner sidebars	Roller diameter	Pin			Sidebar		Ultimate tensile strength
	P	b_1(min)	D(max)	d	L_1	L_2	h	t/T	Fu(min)
	mm	mm	mm	mm	mm	mm	mm	mm	kN
MSR7633-K4	103.2	52.3	47.63	22.23	58.8	66.2	63.5	12.7	444.54

刮板输送机链
Scraper Conveyor Chain

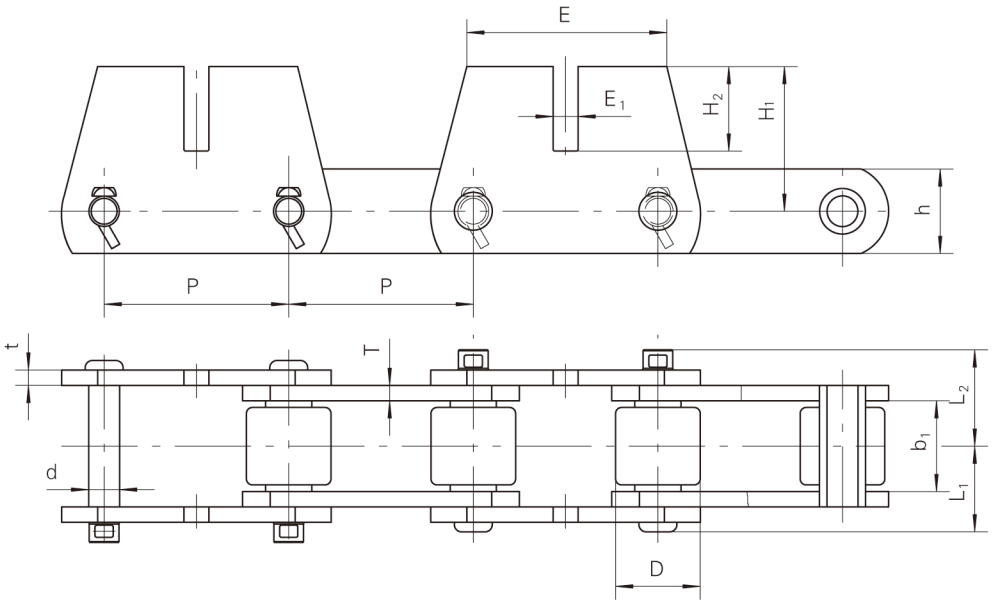

链号	H_1	H_2	E_1	E
Chain No.	mm	mm	mm	mm
RC15517	63.55	33.55	12.5	88.9
RC15759	60.35	34.95	12.8	92
RC15491–M2	79.35	47.6	16.76	114.3
C9856–M2	117.47	69.84	20.6	165.1
9856–M2	117	85.7	20.6	167.8
RC15126	120.65	73	20.6	165.1

链号	节距	内节内宽	滚子外径	销轴			链板		最小抗拉强度	每米重量
Chain No.	Pitch	Width between Inner sidebars	Roller diameter	Pin			Sidebar		Ultimate Tensile strength	Weight per meter
	P	b_1(min)	D(max)	d	L_1	L_2	h	t/T	Fu(min)	q
	mm	mm	mm	mm	mm	mm	mm	mm	kN	kg/m
RC15517	78.1	37.8	31.75	15.88	44.5	48.9	38.1	9.5	266.7	13.52
RC15759	78.1	37.8	31.75	15.88	47.7	52.1	44.5	9.5/12.7	266.7	16.98
RC15491–M2	101.6	50.4	38.1	19.05	57.4	63.6	44.5	12.7	355.6	22.6
C9856–M2	152.4	74.93	69.85	25.3	72.6	82.3	69.85	12.7	622	44.35
9856–M2	152.4	76.2	69.85	25.4	73.4	80.6	70	12.7	622.3	44.8
RC15126	152.4	76.2	69.85	25.4	71.3	77.7	63.5	12.7	622.3	43.0

刮板输送机链
Scraper Conveyor Chain

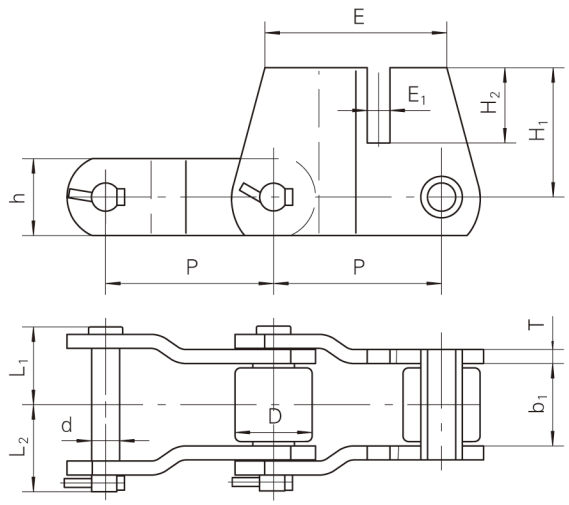

H_1	H_2	E_1	E
mm	mm	mm	mm
117.47	69.84	20.6	165

链号	节距	内节内宽	滚子外径	销轴			链板		最小抗拉强度
Chain No.	Pitch	Width between inner sidebars	Roller diameter	Pin			Sidebar		Ultimate tensile strength
	P	b_1(min)	D(max)	d	L_1	L_2	h	t/T	Fu(min)
	mm	mm	mm	mm	mm	mm	mm	mm	kN
R9856–M2	152.4	74.93	69.85	25.4	70.8	78.6	69.85	12.7	596

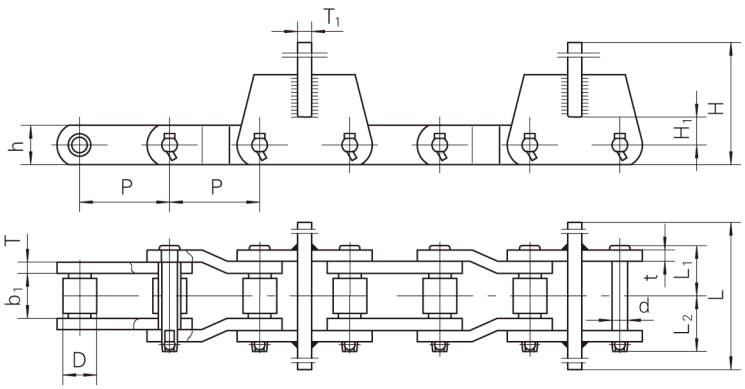

H	H_1	T_1	L
mm	mm	mm	mm
231.8	31.75	16	406.4

链号	节距	内节内宽	滚子外径	销轴			链板		最小抗拉强度	每米重量
Chain No.	Pitch	Width between inner sidebars	Roller diameter	Pin			Sidebar		Ultimate tensile strength	Weight per meter
	P	b_1(min)	D(max)	d	L_1	L_2	h	t/T	Fu(min)	q
	mm	mm	mm	mm	mm	mm	mm	mm	kN	kg/m
RC15582	101.6	50.4	38.1	19.05	57.4	63.6	44.5	12.7	355.6	52.4

刮板输送机链
Scraper Conveyor Chain

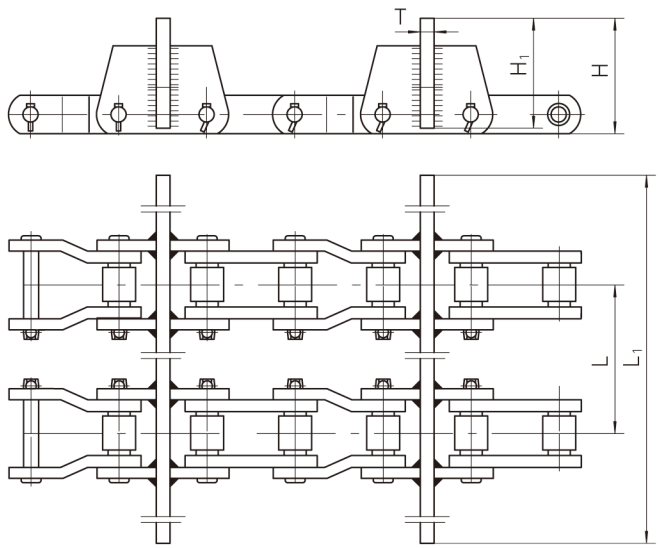

链号	T	H	H_1	L	L_1
Chain No.	mm	mm	mm	mm	mm
ZRC15491-7-56	16	231.8	177.8	876.3	1422.4
ZRC15491-7-58	16	231.8	177.8	876.3	1473.2
ZRC15491-5-56	16	133.3	127	876.3	1428.8

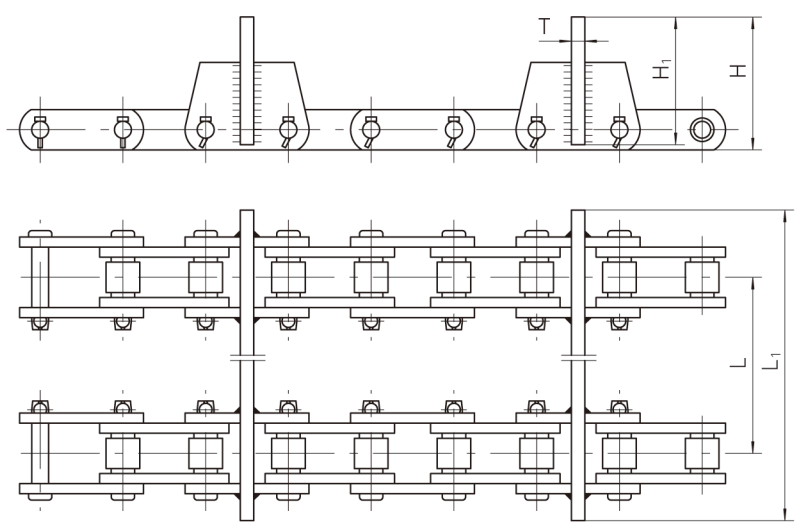

链号	T	H	H_1	L	L_1
Chain No.	mm	mm	mm	mm	mm
ZRC15517	12	125.5	120.8	622.3	749.3
ZRC15759	12	127	120.7	622.3	762

刮板输送机链
Scraper Conveyor Chain

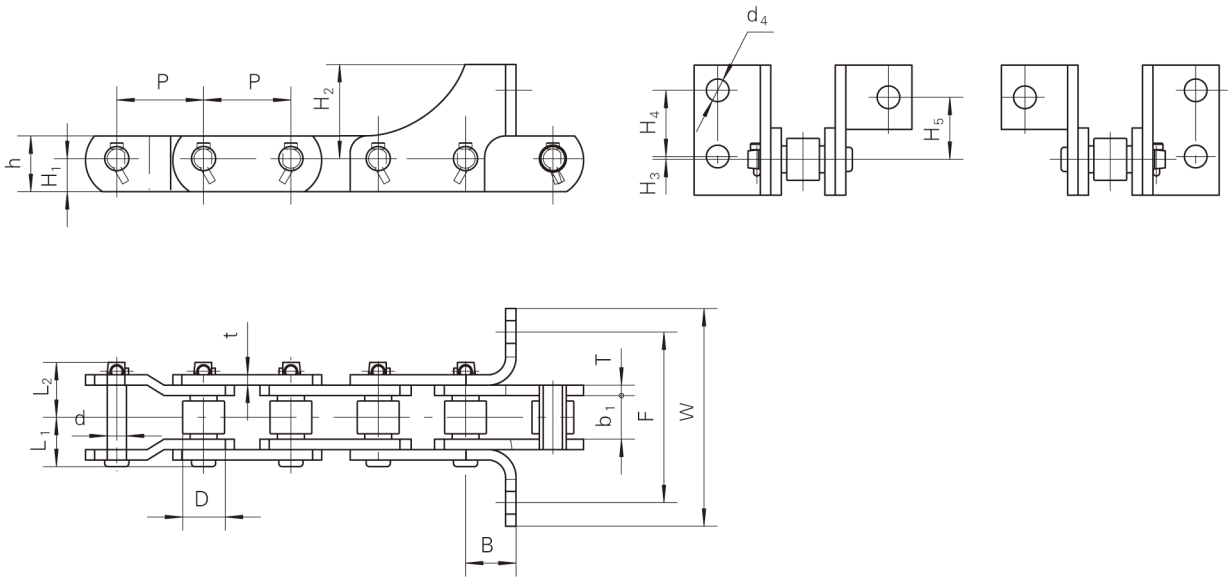

链号	H_1	H_2	H_3	H_4	H_5	B	d_4	F	W
Chain No.	mm	mm	mm	mm	mm	mm	mm	mm	mm
17790–73	30.2	81	1.6	60.3	49.2	45.2	20.6	157.1	192.4
17789–73	30.2	81	1.6	60.3	49.2	45.2	20.6	157.1	192.4
RC16149	30.2	81	1.6	60.3	49.2	45.2	20.6	155.6	203.2
RC16139	30.2	87.3	8	60.3	57.15	45.3	20.6	155.6	200

链号	节距	内节内宽	滚子外径	销轴			链板		最小抗拉强度
Chain No.	Pitch	Width between inner sidebars	Roller Diameter	Pin			Sidebar		Ultimate tensile strength
	P	b_1(min)	D(max)	d	L_1	L_2	h	t/T	Fu(min)
	mm	mm	mm	mm	mm	mm	mm	mm	kN
17790–73	79	38.1	34.93	15.88	41.9	47	50.8	8	222.3
17789–73	79	38.1	34.93	15.88	41.9	47	50.8	8	222.3
RC16149	79	38.1	34.93	15.88	41.9	47	50.8	8	222.3
RC16139	79.5	37.9	38.1	17.48	44	50	57.15	9.5	203

埋刮板输送机链
Embedded Scraper Conveyor Chain

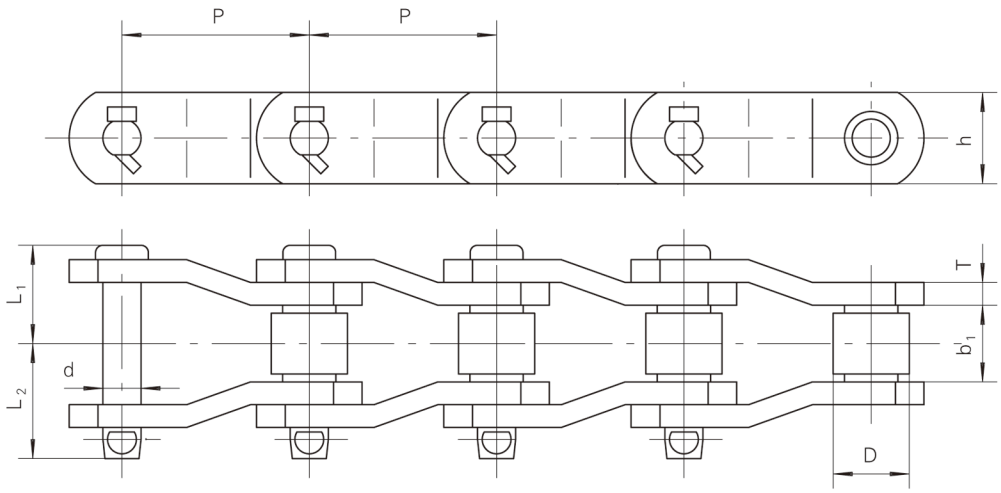

链号	节距	内节内宽	滚子外径	销轴			链板		最小抗拉强度
Chain No.	Pitch	Width between inner sidebars	Roller diameter	Pin			Sidebar		Ultimate tensile strength
	P	b_1(min)	D(max)	d	L_1	L_2	h	T	Fu(min)
	mm	mm	mm	mm	mm	mm	mm	mm	kN
SS40	78.1	31.4	31.75	15.88	41.7	47.5	38.1	9.5	265
B5046	78.1	37.9	31.75	15.88	41.9	46.2	38.1	8	213.6

K1附件
K1 Attachment

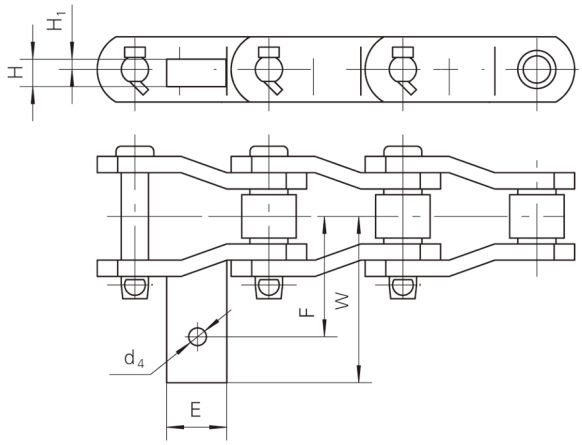

Type A

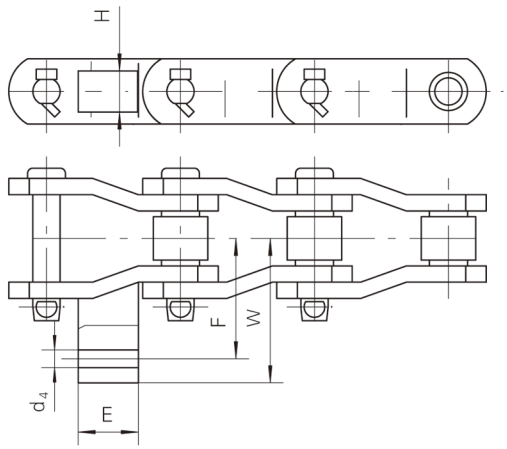

Type B

附件号	链号	F	W	d_4	E	H_1	H	Type
	Chain No.	mm	mm	mm	mm	mm	mm	
AS	SS40	70	96.8	10.3	38.1	6	16	A
	B5046	62.1	75	13.6	43	/	25.4	B

埋刮板输送机链
Embedded Scraper Conveyor Chain

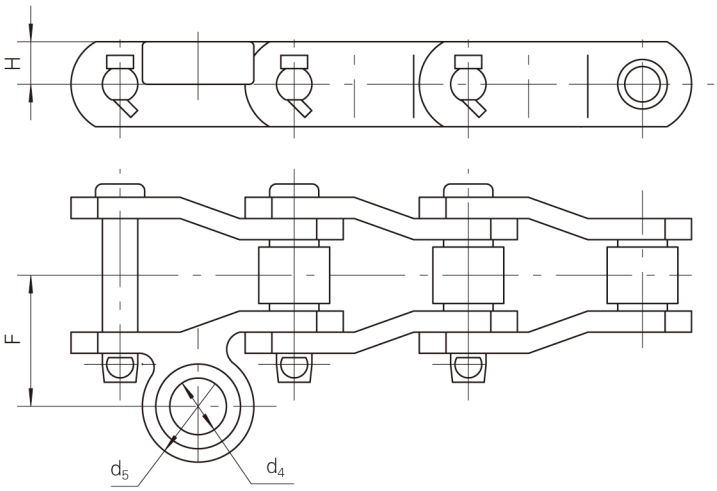

链号	F	d_4	d_5	H
Chain No.	mm	mm	mm	mm
SS40SL	59.4	25.4	50	19

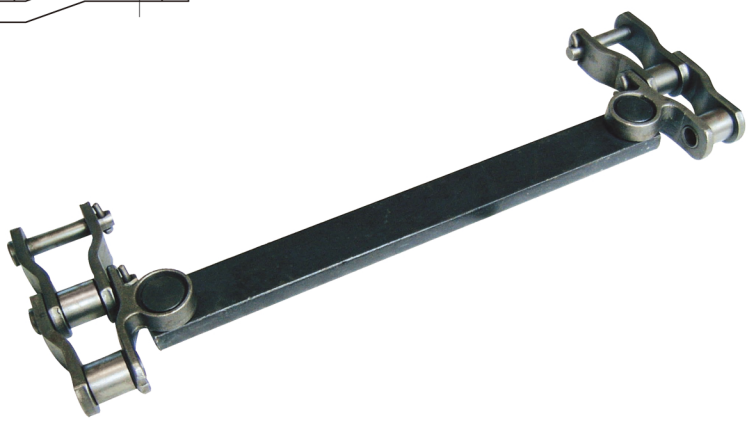

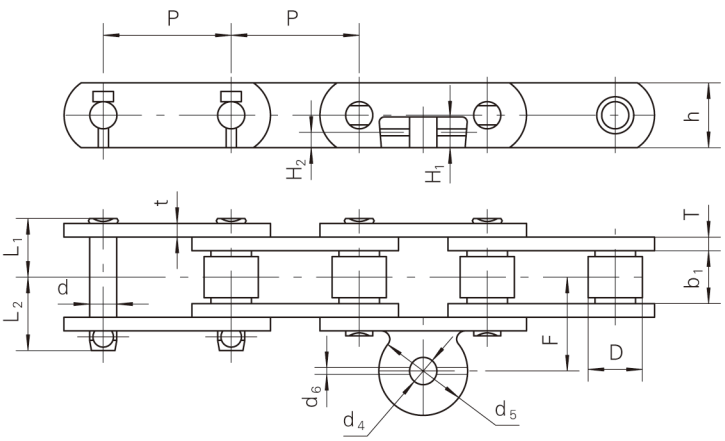

F	d_4	d_5	d_6	H_1	H_2
mm	mm	mm	mm	mm	mm
55	16	52	4	18	9

链号	节距	内节内宽	滚子外径	销轴			链板		最小抗拉强度
Chain No.	Pitch	Width between inner sidebars	Roller diameter	Pin			Sidebar		Ultimate tensile strength
	P	b_1(min)	D(max)	d	L_1	L_2	h	t/T	Fu(min)
	mm	mm	mm	mm	mm	mm	mm	mm	kN
7513–S–SL	75	31.4	31.75	15.88	35.7	42.8	38.1	8	127

埋刮板输送机链
Embedded Scraper Conveyor Chain

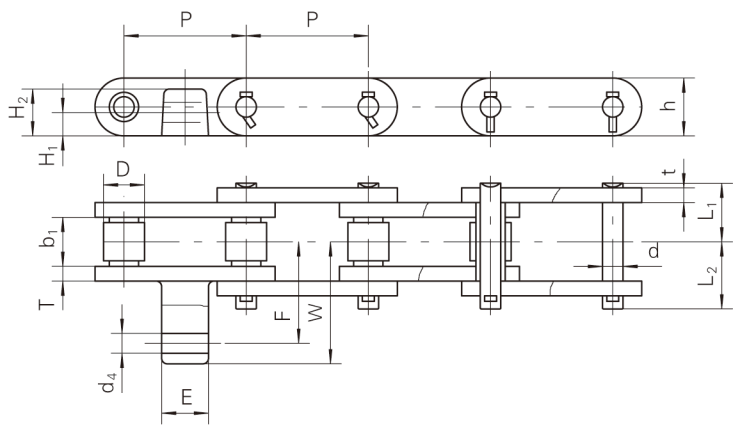

F	W	d_4	E	H_1	H_2
mm	mm	mm	mm	mm	mm
54.9	66	10.3	25.4	12.7	25.4

链号	节距	内节内宽	滚子外径	销轴			链板		最小抗拉强度
Chain No.	Pitch	Width between inner sidebars	Roller diameter	Pin			Sidebar		Ultimate tensile strength
	P	b_1(min)	D(max)	d	L_1	L_2	h	t/T	Fu(min)
	mm	mm	mm	mm	mm	mm	mm	mm	kN
RC16027	66.27	26.99	22.23	11.1	31.4	35.9	31.4	7.5	186.7

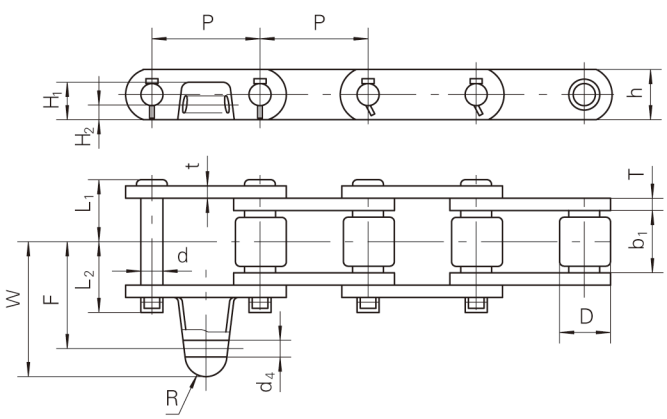

F	W	d_4	R	H_1	H_2
mm	mm	mm	mm	mm	mm
62.1	80.2	11	13.5	24	9.5

链号	节距	内节内宽	滚子外径	销轴			链板		最小抗拉强度
Chain No.	Pitch	Width between inner sidebars	Roller diameter	Pin			Sidebar		Ultimate tensile strength
	P	b_1(min)	D(max)	d	L_1	L_2	h	t/T	Fu(min)
	mm	mm	mm	mm	mm	mm	mm	mm	kN
C1594	69.85	24.8	31.75	14.27	33	38.2	32.5	8	130

埋刮板输送机链
Embedded Scraper Conveyor Chain

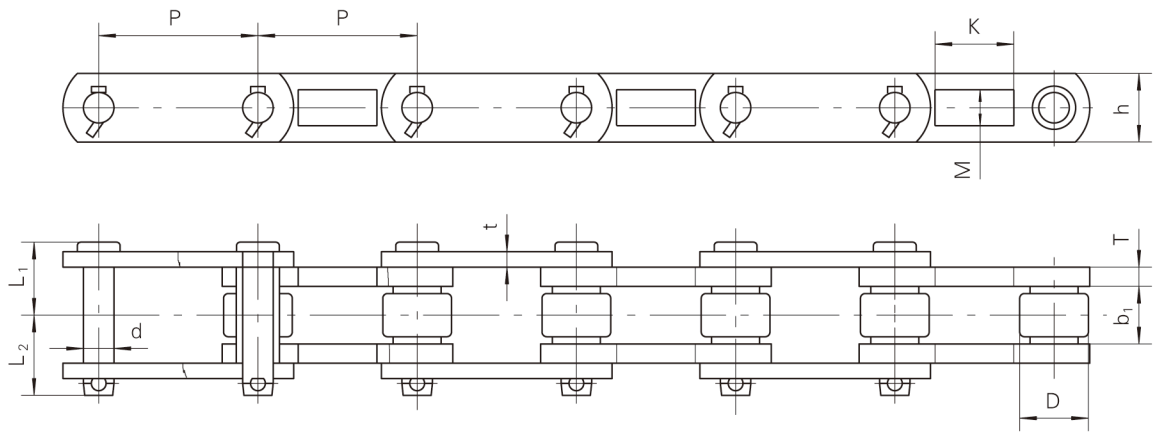

链号	节距	内节内宽	滚子外径	销轴			链板				最小抗拉强度	每米重量
Chain No.	Pitch	Width between inner sidebars	Roller diameter	Pin			Sidebar				Ultimate tensile strength	Weight per meter
	P	b_1(min)	D(max)	d	L_1	L_2	H	t/T	M	K	Fu(min)	q
	mm	mm	mm	mm	mm	mm	mm	mm	mm	mm	kN	kg/m
RC15758	66.27	23.7	28.6	12.7	31.3	35.5	28.6	6.4/8	15	32.8	142.2	6.5
C1598	69.85	15.8	31.75	14.27	28.4	33.3	32.5	8	14.2	33.3	130	6.8

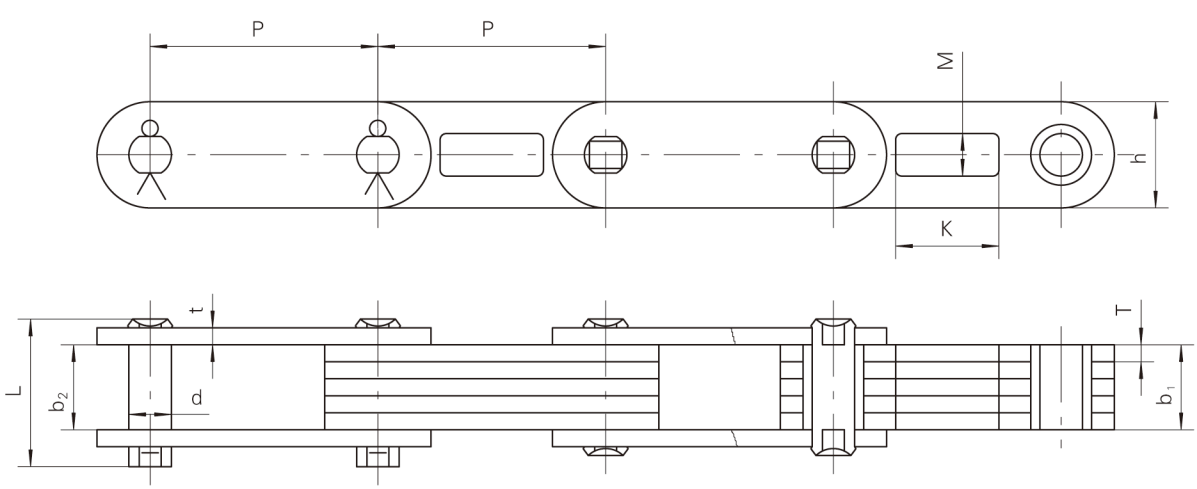

链号	节距	内节外宽	外节内宽	销轴		链板				最小抗拉强度	每米重量
Chain No.	Pitch	Width between inner sidebars	Width between outer sidebars	Pin		sidebar				Ultimate tensile strength	Weight per meter
	P	b_1(max)	b_2(min)	d	L	h	t/T	M	K	Fu(min)	q
	mm	mm	mm	mm	mm	mm	mm	mm	mm	kN	kg/m
ZL70	70	32	33	15.8	68.5	32	9.5/8	16	32	206	8.14
ZL75	75	29.5	30.3	14	51.3	35	5.6	14	34	206	6.73

埋刮板输送机链
Embedded Scraper Conveyor Chain

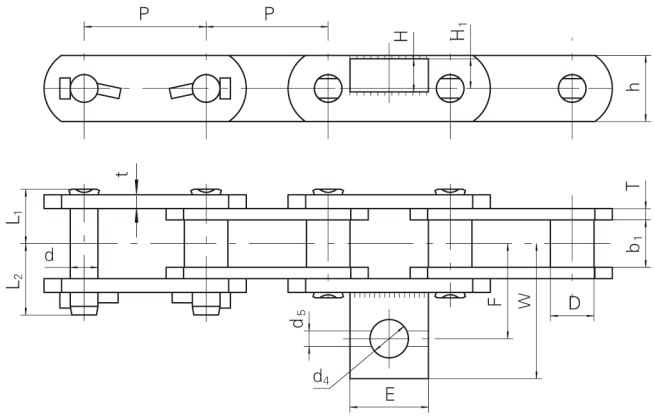

F	W	d_4	d_5	E	H_1	H
mm	mm	mm	mm	mm	mm	mm
54.6	73.8	22	9	45	17	19

链号	节距	内节内宽	套筒外径	销轴			链板		最小抗拉强度
Chain No.	Pitch	Width between inner sidebars	Bush diameter	Pin			Sidebar		Ultimate tensile strength
	P	b_1(min)	D(max)	d	L_1	L_2	h	t/T	Fu(min)
	mm	mm	mm	mm	mm	mm	mm	mm	kN
HSB70	70	27	25	15.88	32	39	38.1	8/6.4	150

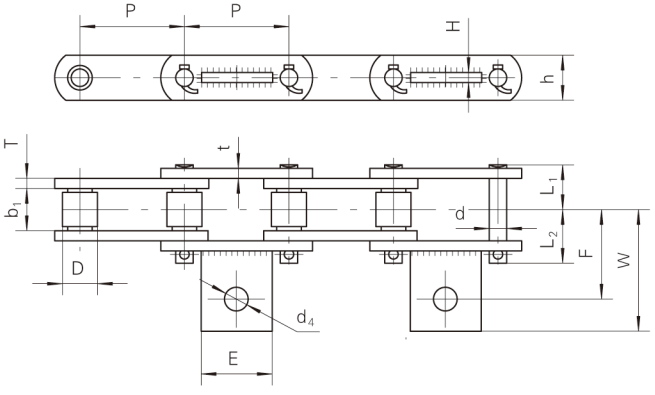

链号	F	W	d_4	E	H
Chain No.	mm	mm	mm	mm	mm
RC15352	37.8	53.7	8.7	31.8	6.4
SGR–188	43.5	58.4	6.3	31.8	6.4
RC15310	63.5	80	16	45	6.4
RC15652	57.15	88.9	13	44.5	9.5

链号	节距	内节内宽	滚子外径	销轴			链板		最小抗拉强度
Chain No.	Pitch	Width between Inner sidebars	Roller diameter	Pin			Sidebar		Ultimate tensile strength
	P	b_1(min)	D(max)	d	L_1	L_2	h	t/T	Fu(min)
	mm	mm	mm	mm	mm	mm	mm	mm	kN
RC15352	57.15	26.99	22.23	11.1	24.5	28.5	23.8	4	49.2
SGR–188	66.27	26.8	22.23	11.1	28.8	33.6	28.6	6.4	124.6
RC15310	66.27	26.8	22.23	11.1	28.8	33.6	28.6	6.4	124.6
RC15652	101.6	25.5	28.58	14.27	29	33.2	41.3	6.4	200

埋刮板输送机链
Embedded Scraper Conveyor Chain

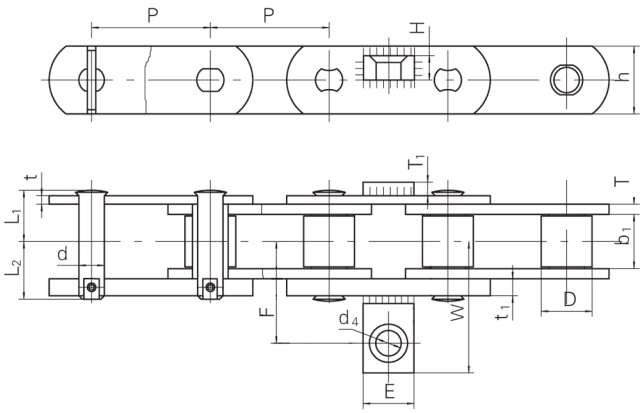

F	W	d_4	E	T_1	H
mm	mm	mm	mm	mm	mm
60.5	77.9	14	30	8	15

链号	节距	内节内宽	滚子外径	销轴			链板				最小抗拉强度
Chain No.	Pitch	Width between inner sidebars	Roller diameter	Pin			Sidebar				Ultimate tensile strength
	P	b_1(min)	D(max)	d	L_1	L_2	h	t	T	t_1	Fu(min)
	mm	mm	mm	mm	mm	mm	mm	mm	mm	mm	kN
RMC70	70	32	30	15	31.6	33.4	40	5	6	10	194

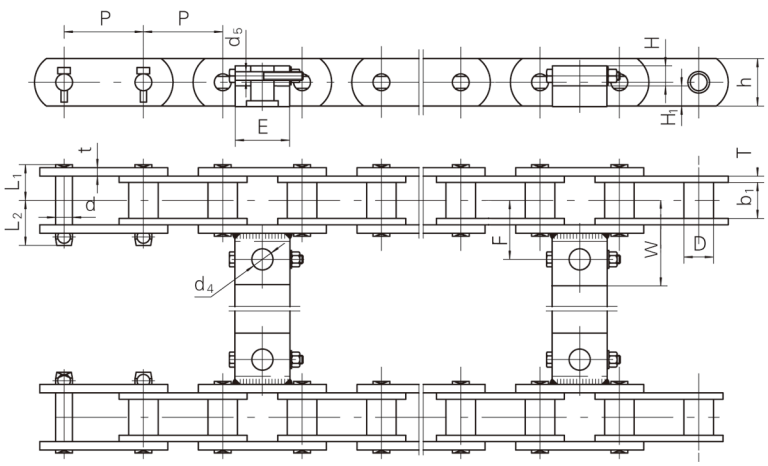

F	W	d_4	d_5	E	H_1	H
mm	mm	mm	mm	mm	mm	mm
56.5	81.5	22	9	50	20	19.7

链号	节距	内节内宽	滚子外径	销轴			链板		最小抗拉强度
Chain No.	Pitch	Width between inner sidebars	Roller diameter	Pin			Sidebar		Ultimate tensile strength
	P	b_1(min)	D(max)	d	L_1	L_2	h	t/T	Fu(min)
	mm	mm	mm	mm	mm	mm	mm	mm	kN
HSR80-SL562A	80	34	27.94	15.88	35	42.2	45	8/6	190

埋刮板输送机链
Embedded Scraper Conveyor Chain

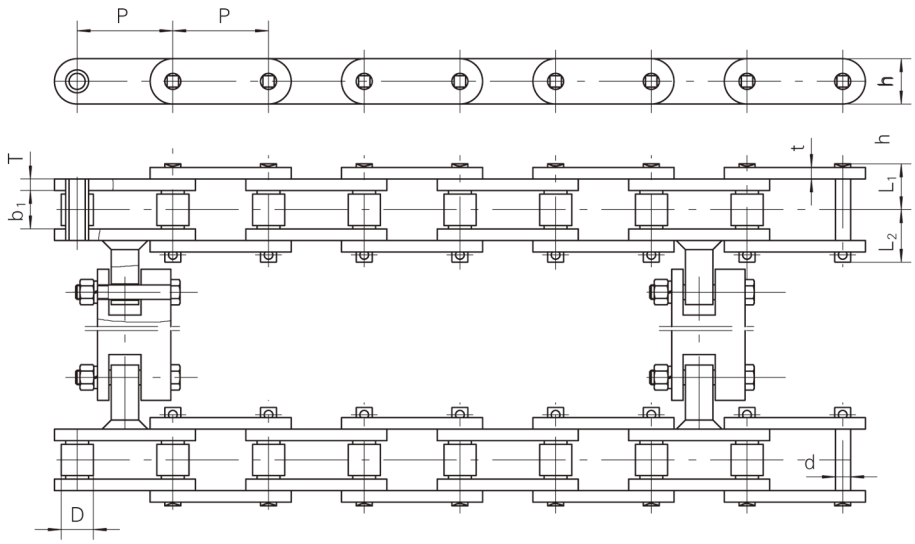

链号	节距	内节内宽	滚子外径	销轴			链板		最小抗拉强度
Chain No.	Pitch	Width between inner sidebars	Roller diameter	Pin			Sidebar		Ultimate tensile strength
	P	b_1(min)	D(max)	d	L_1	L_2	h	t/T	Fu(min)
	mm	mm	mm	mm	mm	mm	mm	mm	kN
RC15739	66.27	26.99	22.23	11.1	31.4	34.9	31.4	7.5	373.4

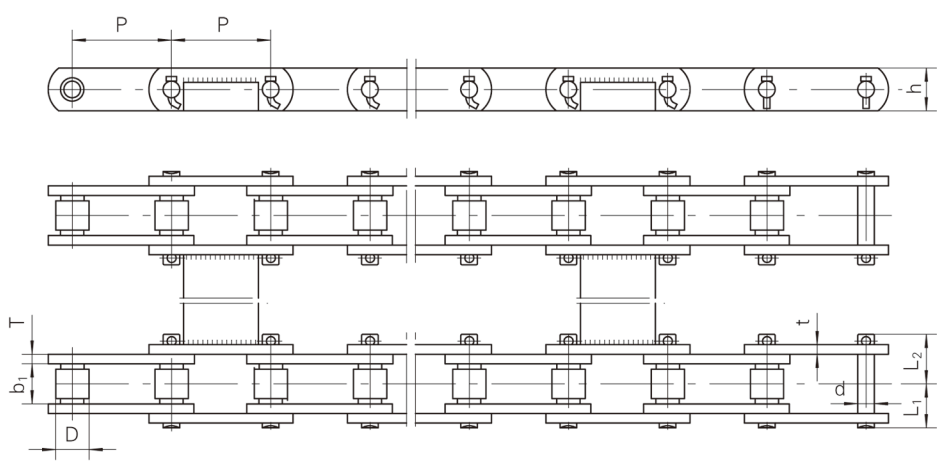

链号	节距	内节内宽	滚子外径	销轴			链板		最小抗拉强度
Chain No.	Pitch	Width between inner sidebars	Roller diameter	Pin			Sidebar		Ultimate tensile strength
	P	b_1(min)	D(max)	d	L_1	L_2	h	t/T	Fu(min)
	mm	mm	mm	mm	mm	mm	mm	mm	kN
RC15718	66.27	26.8	22.23	11.1	28.8	33.6	28.6	6.4	284.6